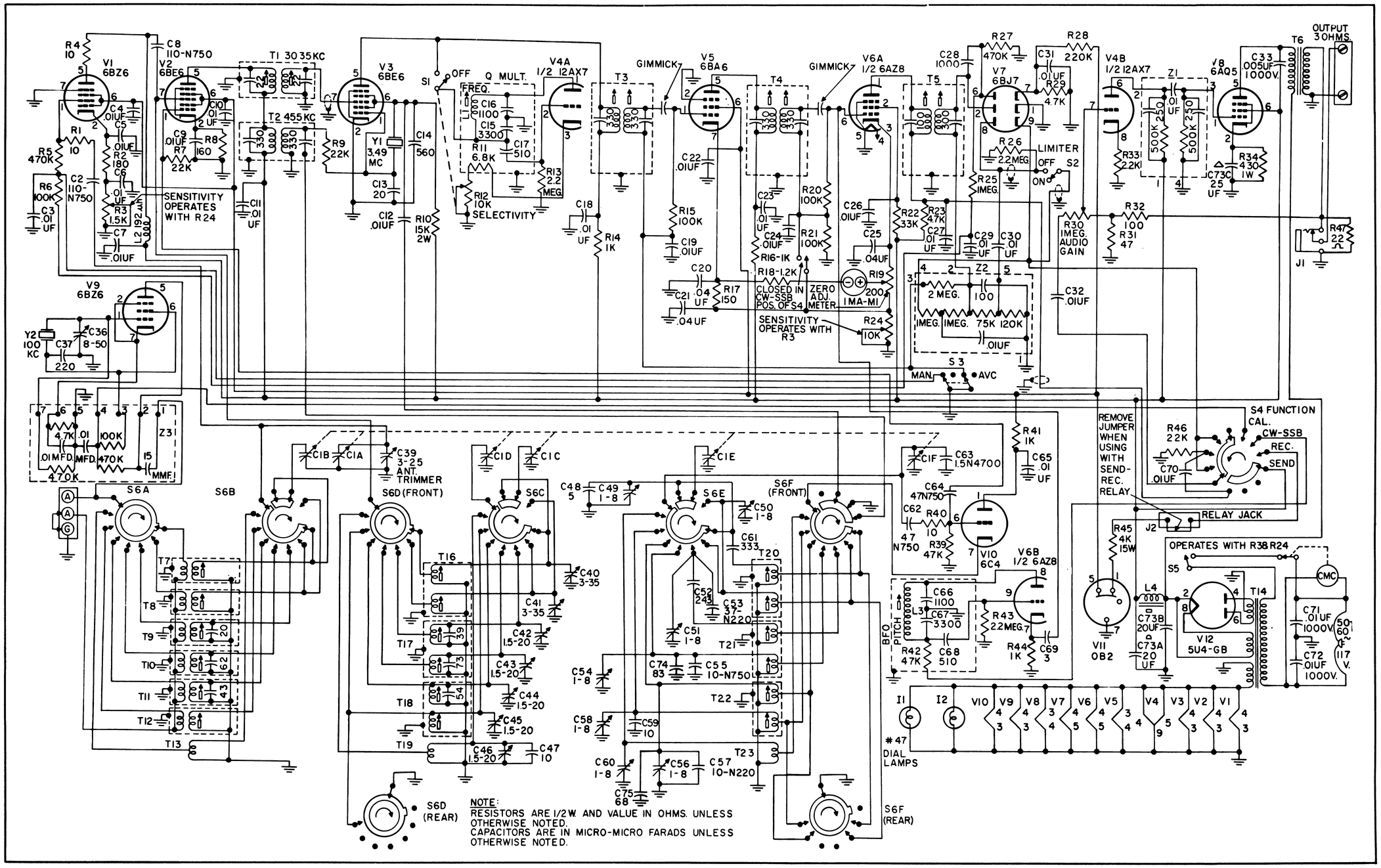

Figure 10. Hammarlund HQ-110 Communications Receiver, Schematic Diagram